VANGUARD™
Standing between you and harm

d-flexx

d-flexx Juliet/ Self-Closing Gate

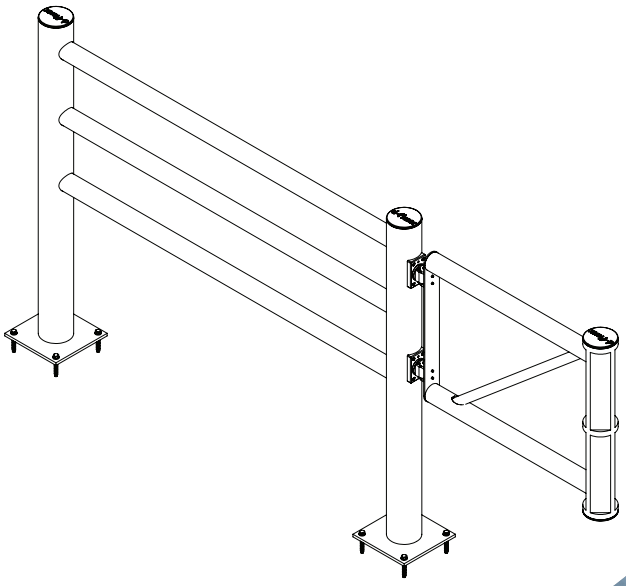

vanguardgroup.co.nz

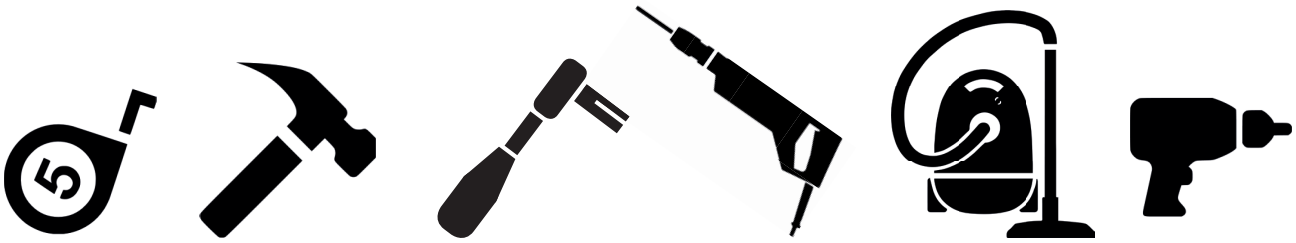

"Delta"

DFJU-TM
DFJU-TE
DFJU-TW90L
DFJU-TW90R

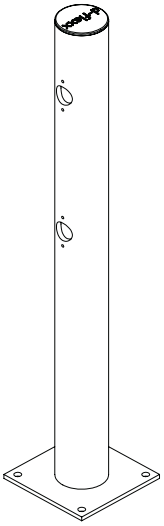

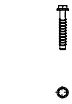

747.27-1

DFJU-T800
DFJU-T1000
DFJU-T1200

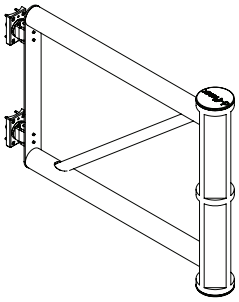

DFJU-T1500
DFJU-T1750
DFJU-T2000

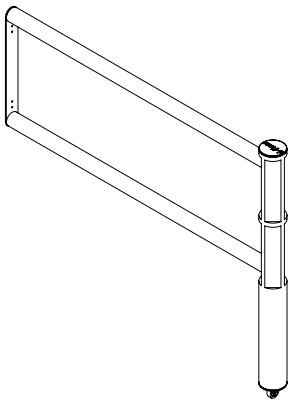

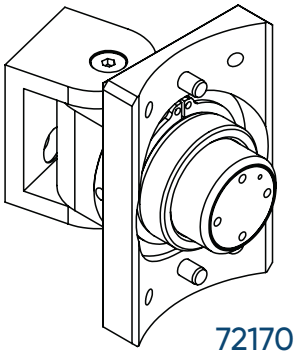

72170

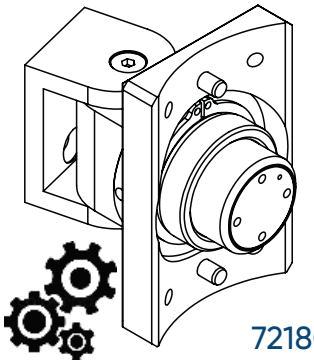

72180

72191 72192 72175

72170

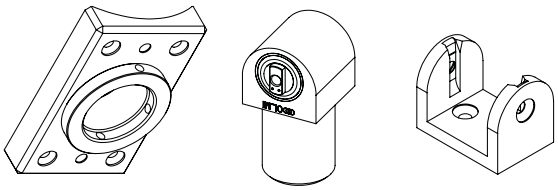

72180

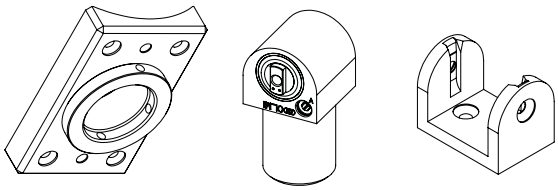

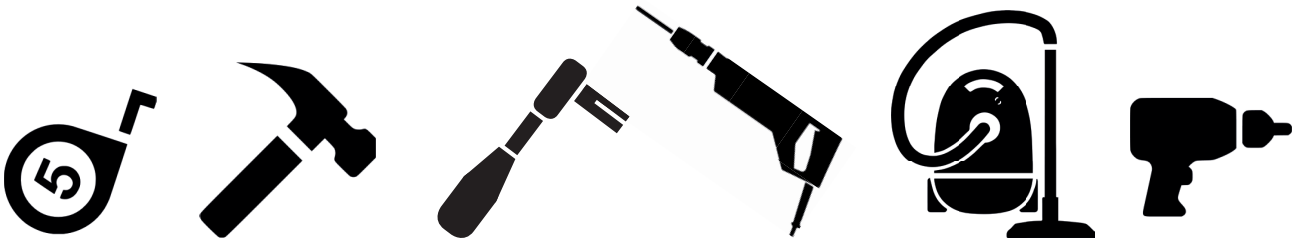

"Echo"

DFJU+TE
DFJU+TM
DFJU+TT
DFJU-TW90L
DFJU-TW90R

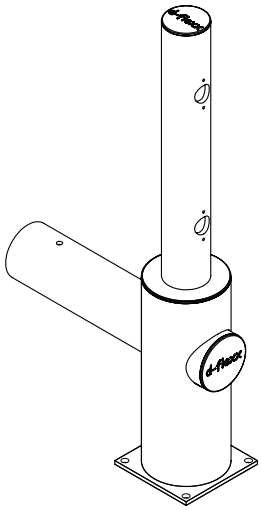

747.27-1

DFJU-T800
DFJU-T1000
DFJU-T1200

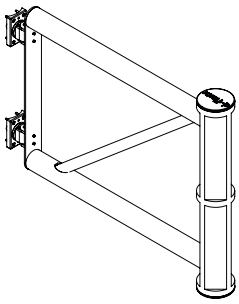

DFJU-T1500
DFJU-T1750
DFJU-T2000

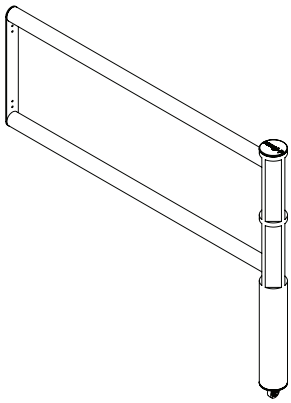

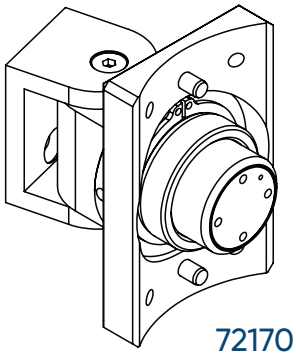

72170

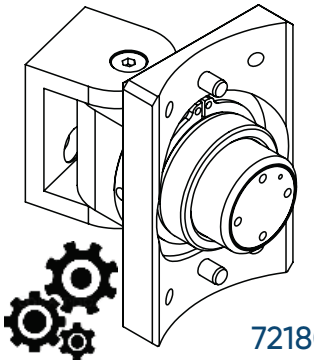

72180

72191

72192

72175

72170

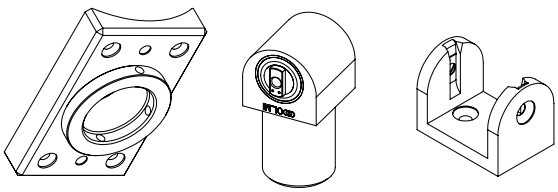

72180

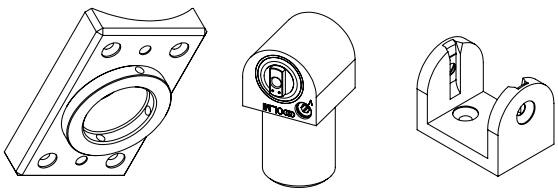

"Delta"

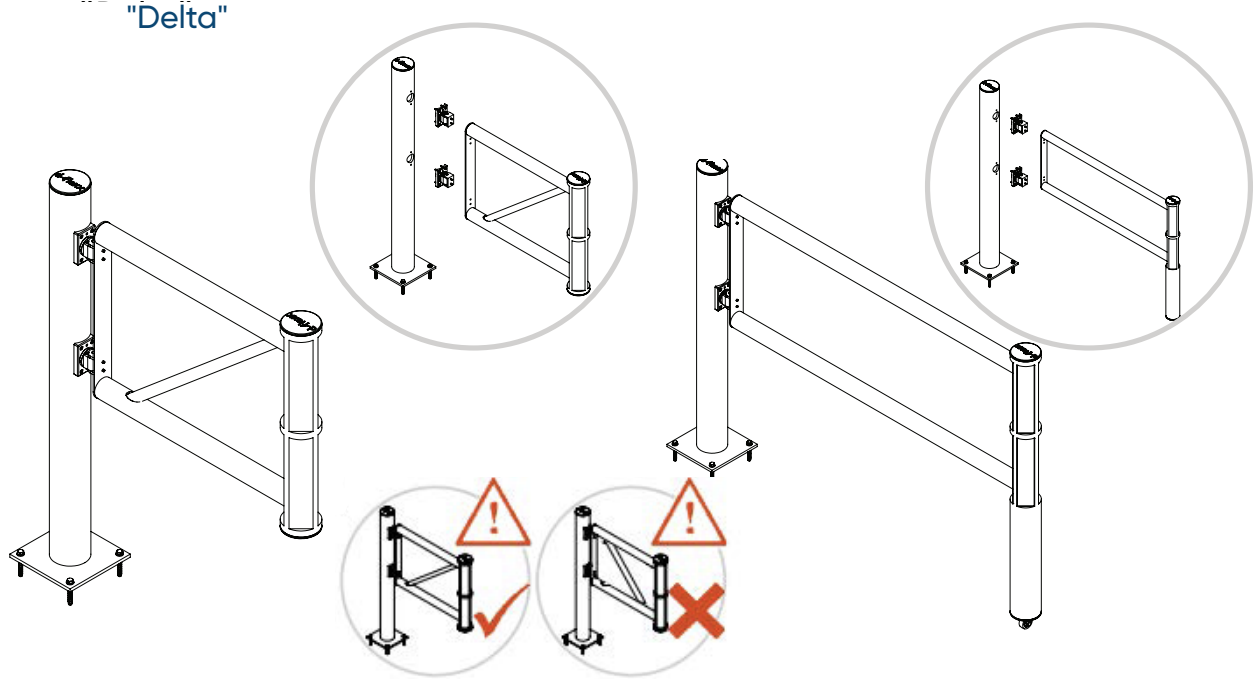

"Echo"

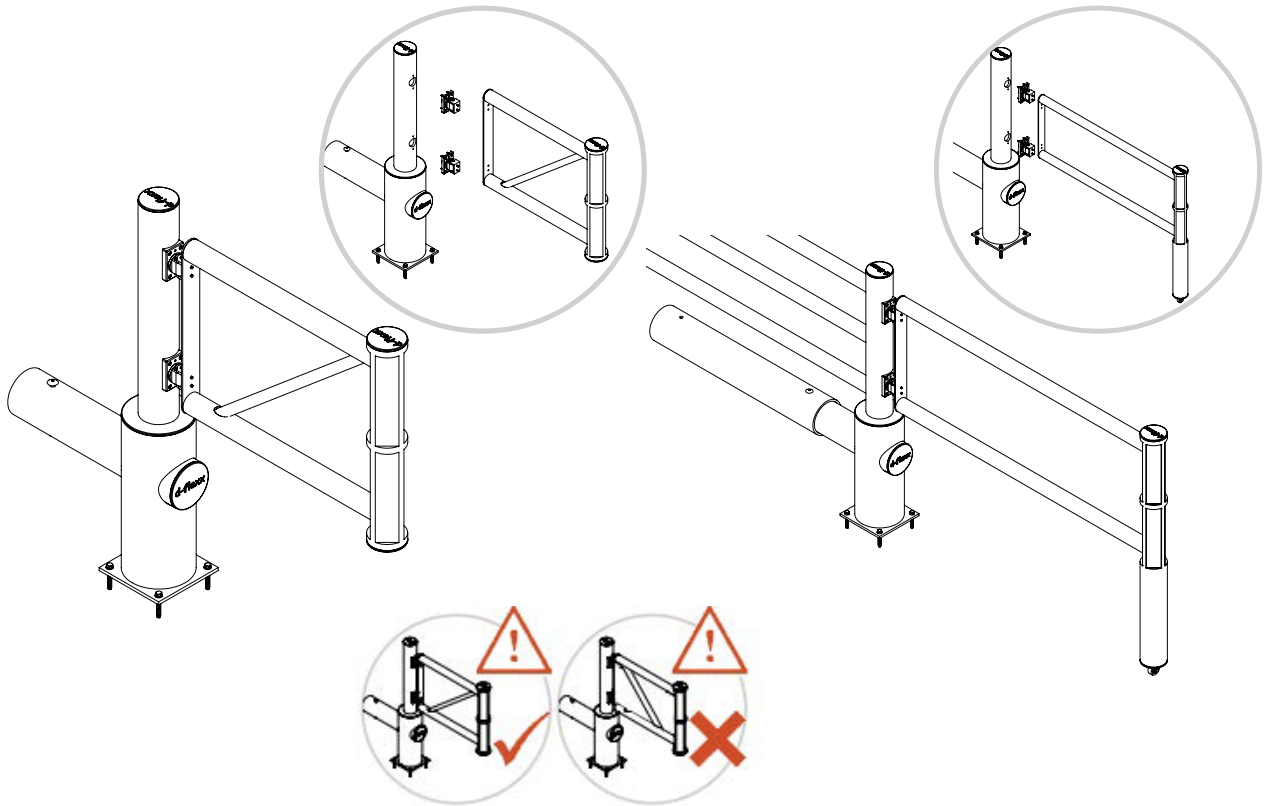

d-flexx
Juliet/Self-Closing Gate

VANGUARD™
Standing between you and harm

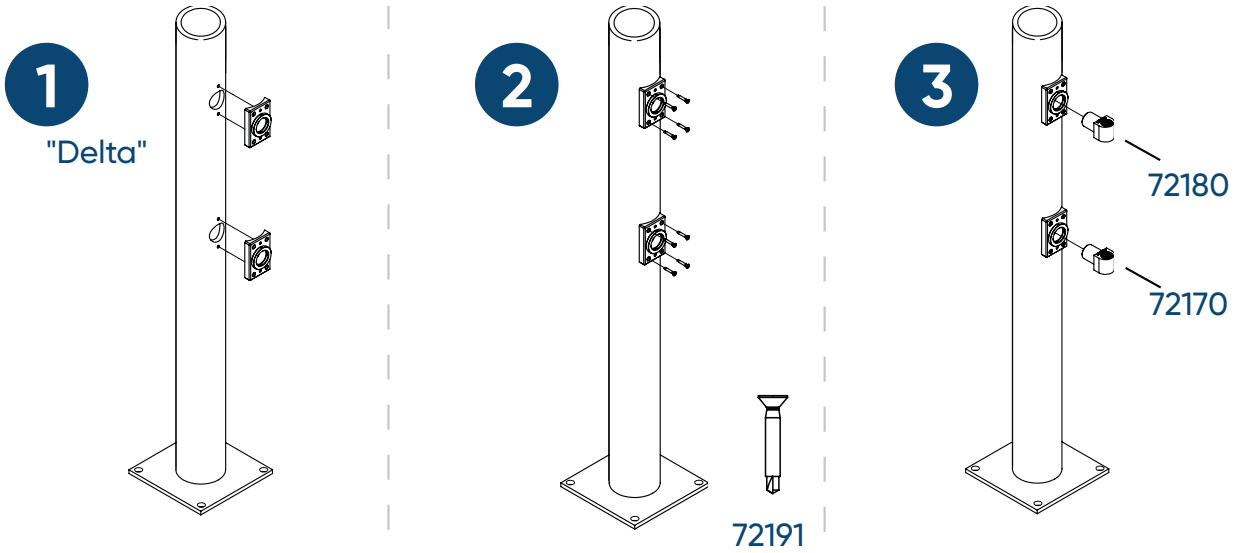

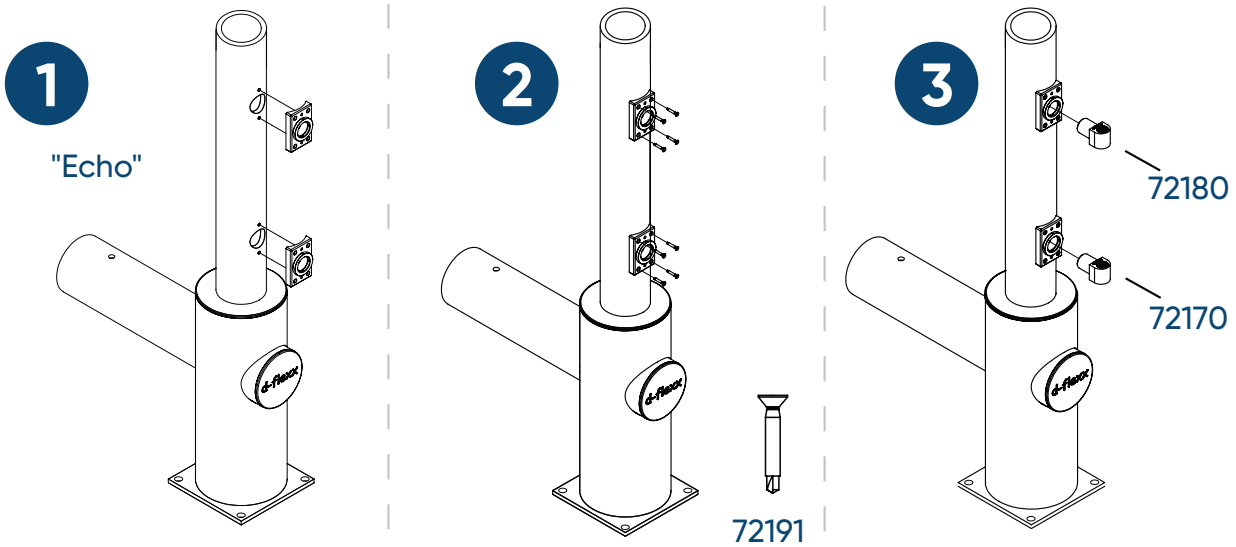

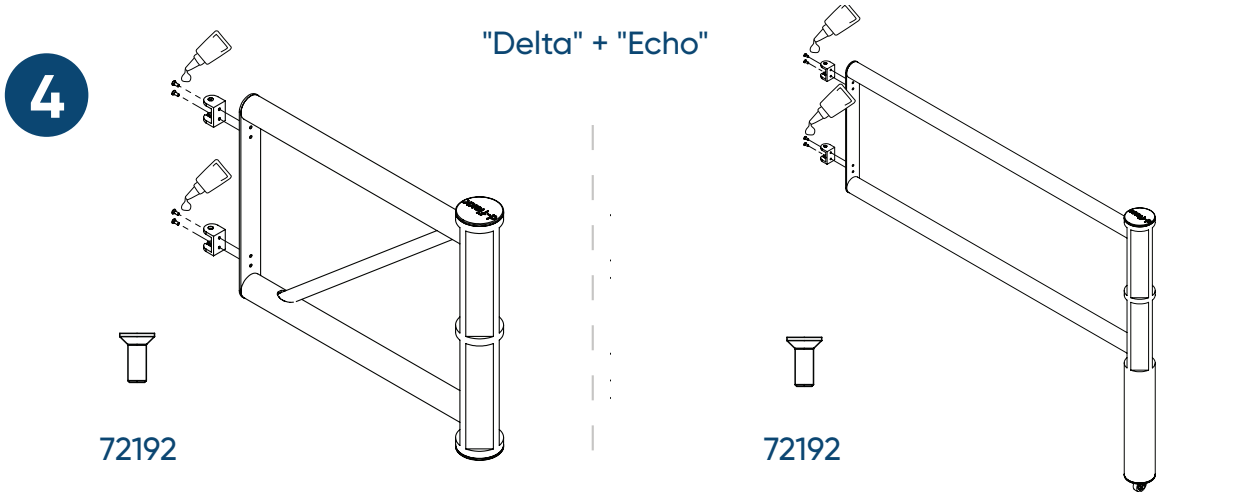

VANGUARD™
Standing between you and harm

5

"Delta" + "Echo"

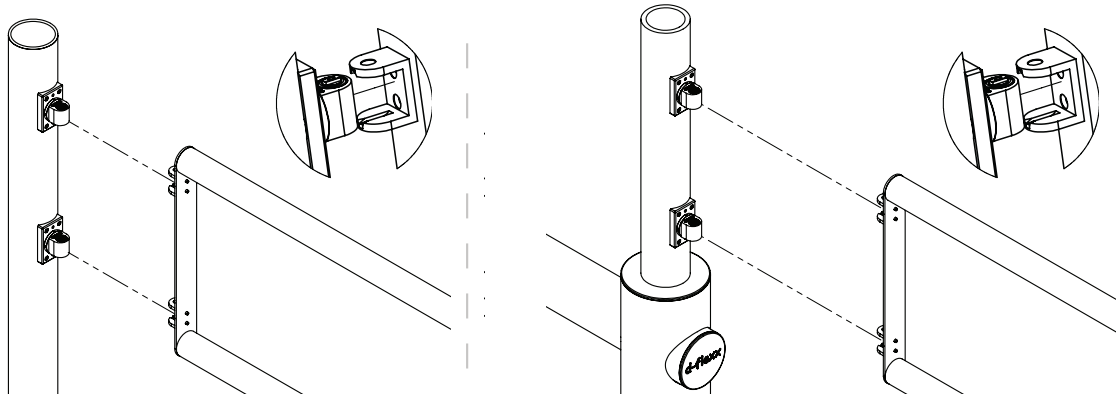

6

"Delta" + "Echo"

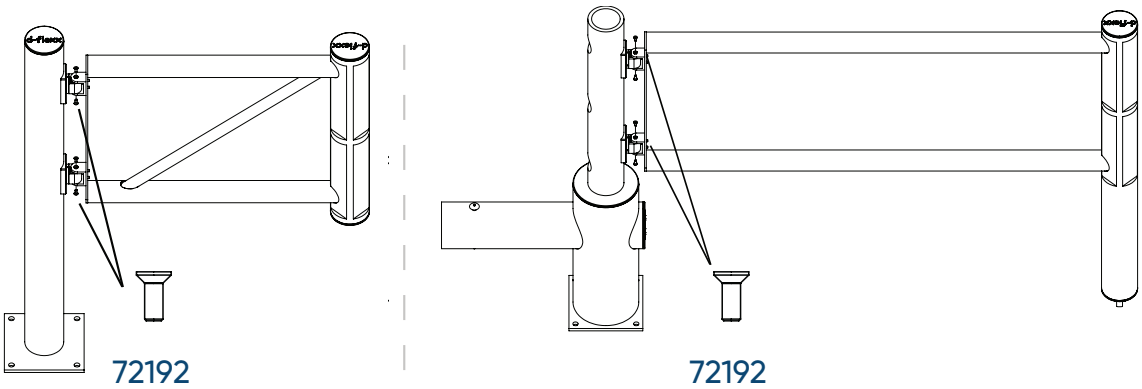

7

"Delta" + "Echo"

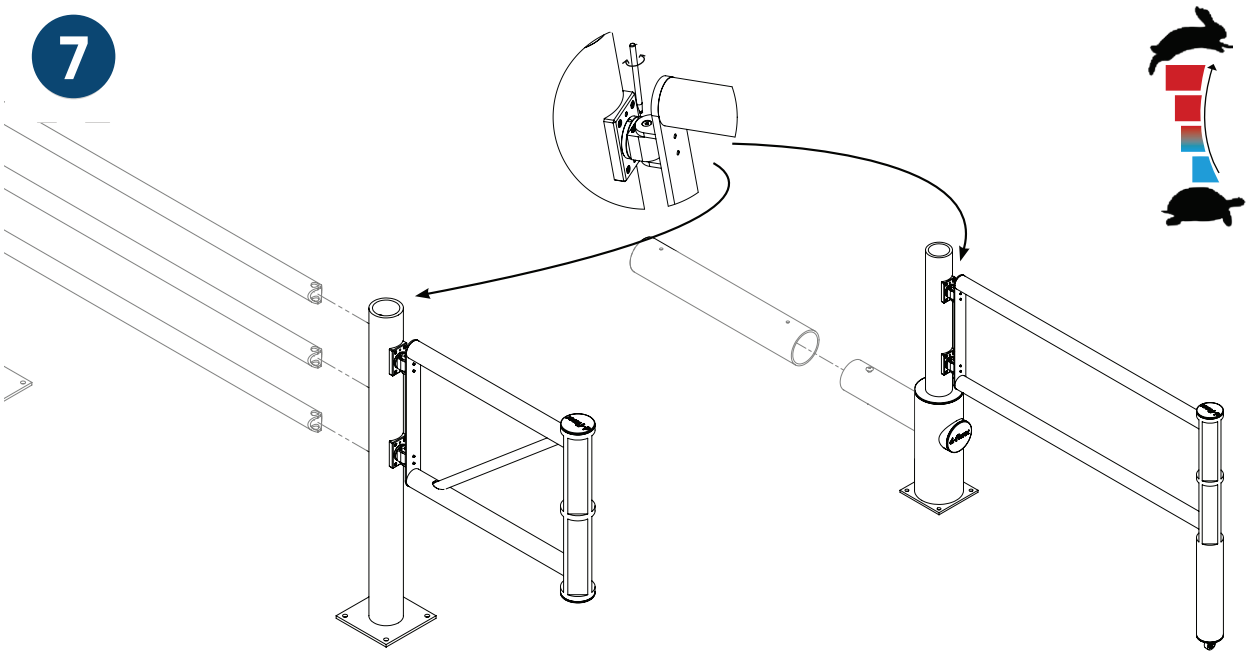

VANGUARD™
Standing between you and harm

8

"Echo"

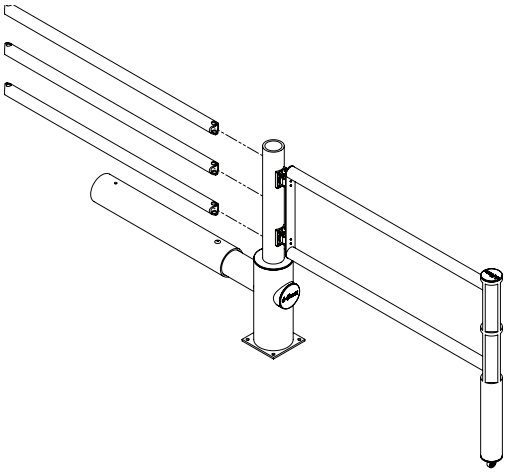

9

"Delta" + "Echo"

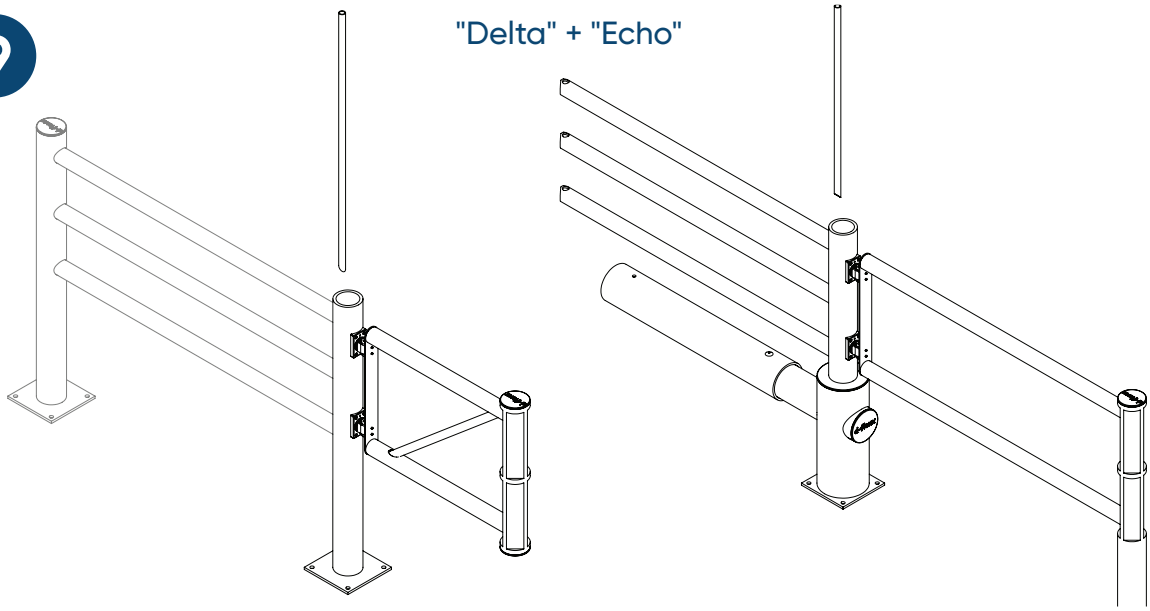

10

"Delta" + "Echo"

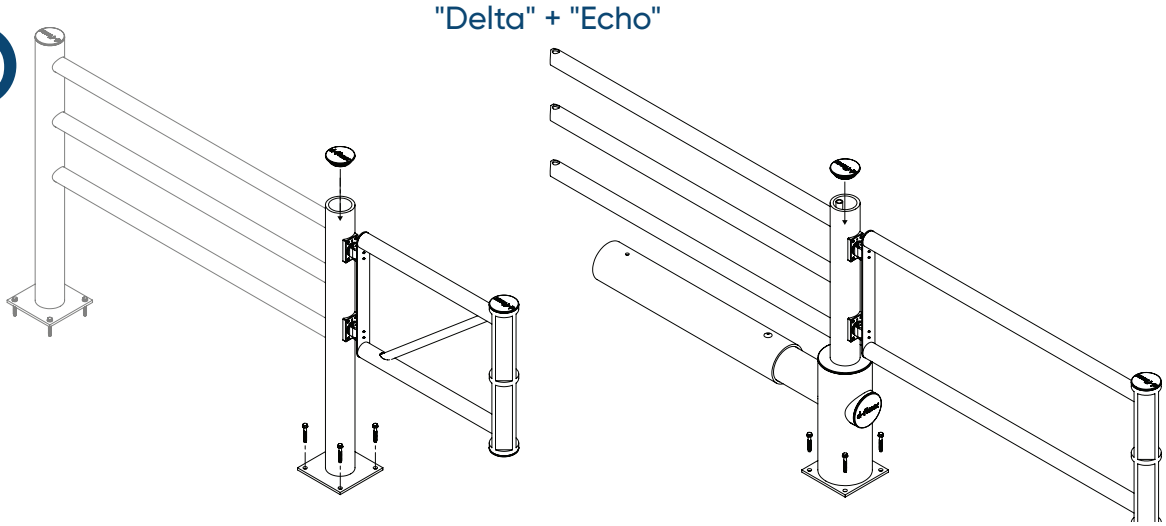

11

"Delta" + "Echo"

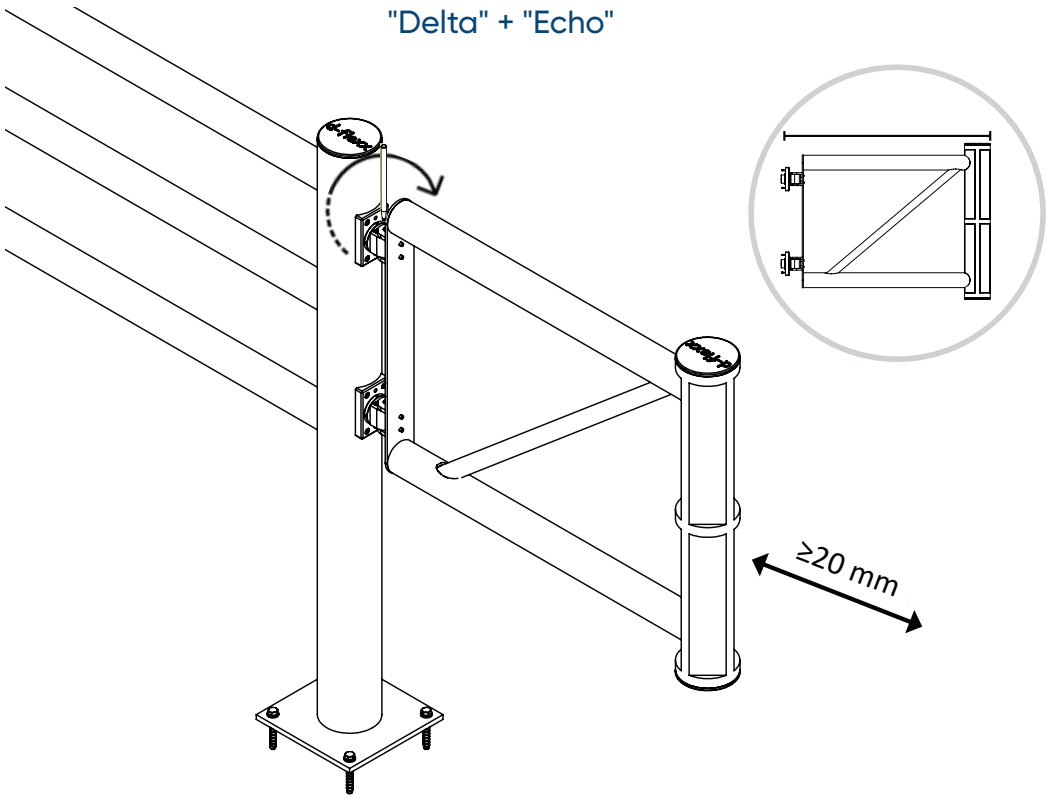

12

"Delta" + "Echo"

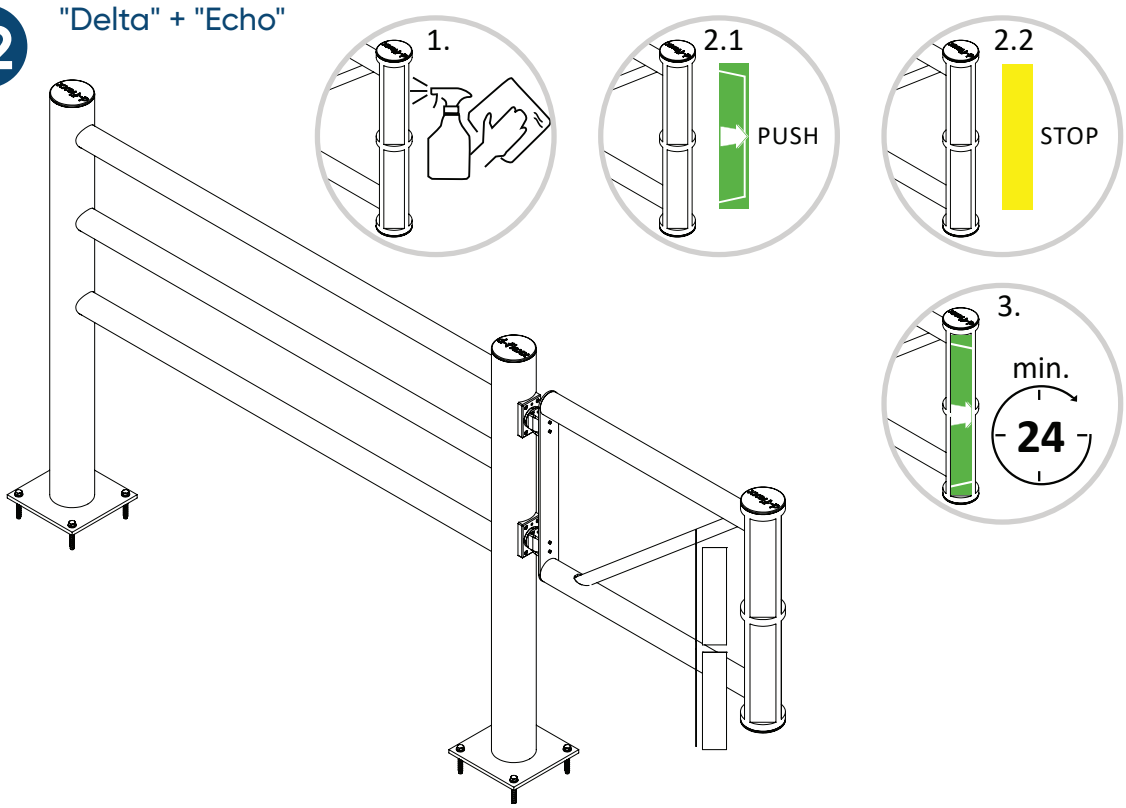

13

"Delta" + "Echo"

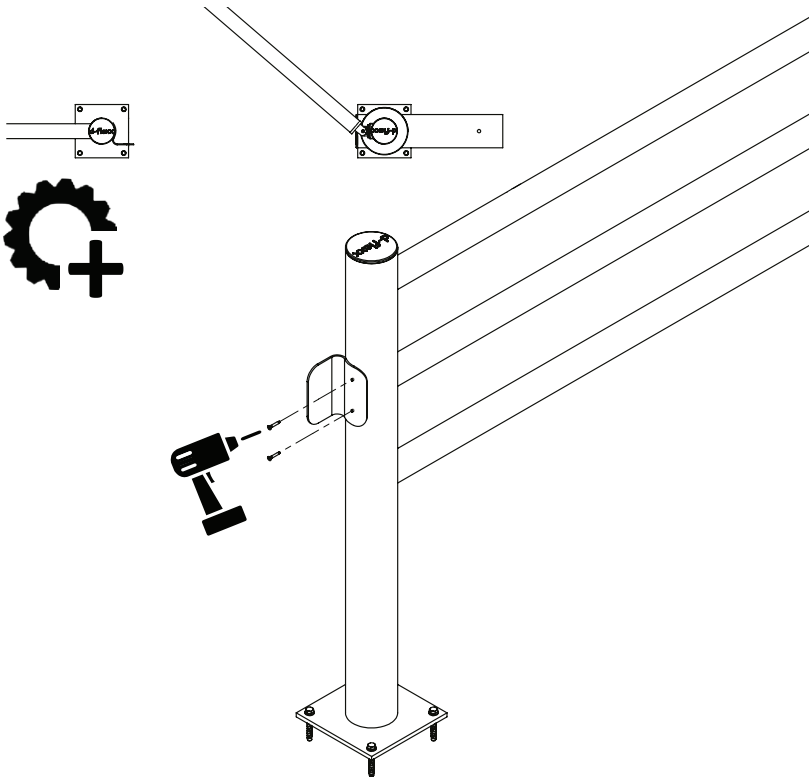

14
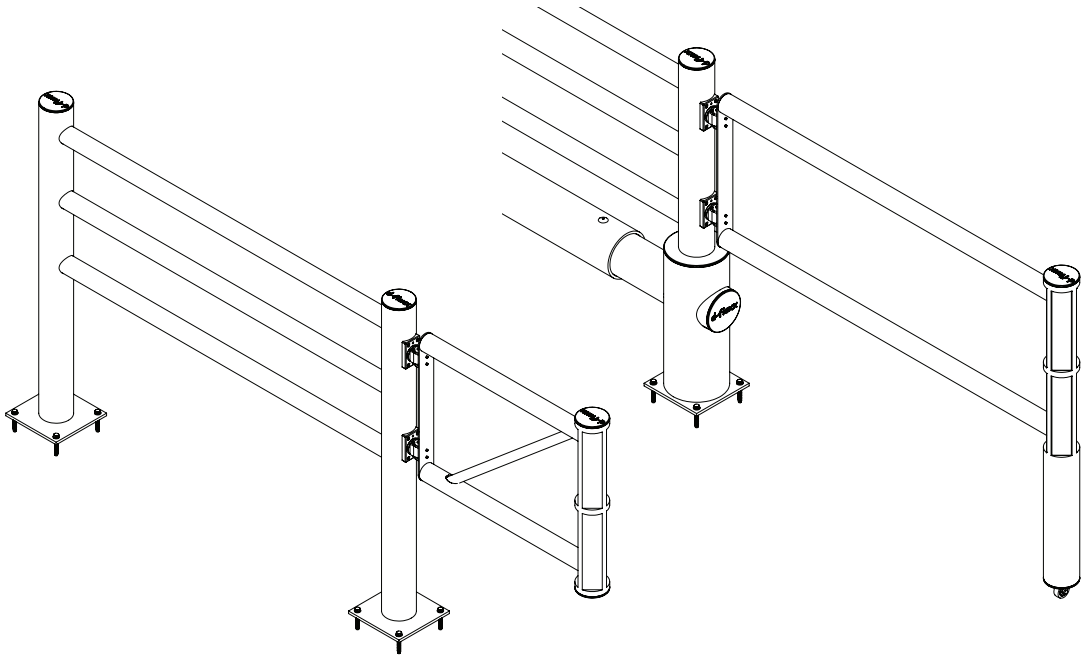
"Delta" + "Echo"