KP SERIES

COLUMN AND CORNER PROTECTION

PRODUCT SPECIFICATIONS

APPLICATION	
Environment	Air columns for controlled impact absorption. Retains its original shape due to its extensive absorbing capacities. Column protectors prevent structural damage to columns, posts & pillars in warehouses, production halls, airports and parking facilities. Stackable on top of each other for higher protection.
Impact performance at 90°	KP: 2200 Joule (Eq. to 2,5 ton - 4,8 km/h)
MATERIAL	
Column protector	Rexilene® - UV resistant - Fire class E* - Non conductive - Impervious to most chemicals**
Straps	Velcro® ties
STANDARD COLOURS	
Column protector	H1100: Yellow RAL 1003 H500: Yellow RAL1003 & Red RAL 3002
Straps	Black
FIXATIONS	
Velcro straps	Black straps to hold both halves together
Bolt fixation (optional)	KP fixation set (2) ZC - H500 - 200/300 KP fixation set (4) ZC - H1100 - 100/150/200/300/400 KP fixation set (6) ZC - H1100 - 500/600
REQUIREMENTS	
Environment	Indoor and outdoor use
Working Temperatures	-10°C up to +40°C

*Classification according to EN 13501-1:2007 +A1:2009 - Fire classification of construction products and building elements.
**Ask your local sales office for resistance to specific chemicals.

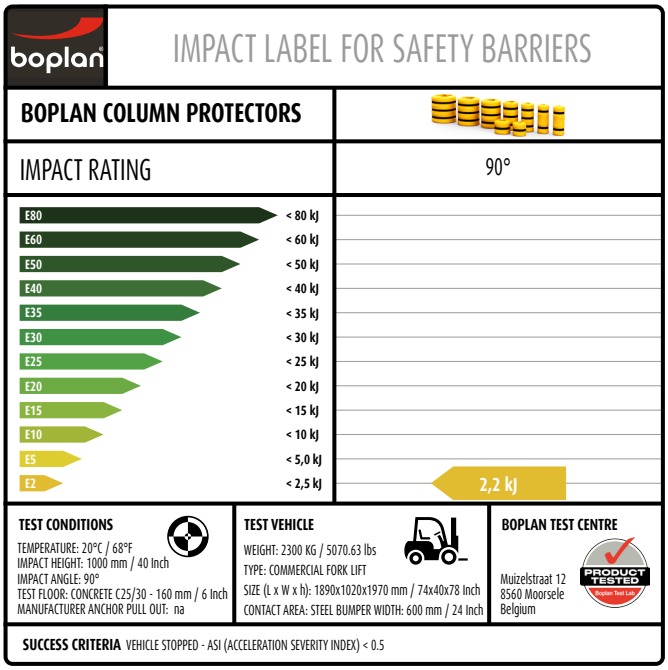

KP100 - H1100 mm

KP1000-1100-S200YE	KP1000-1100-S100YE
2 halves (2 straps 1800mm included)	1 halve (2 straps 1800mm included)
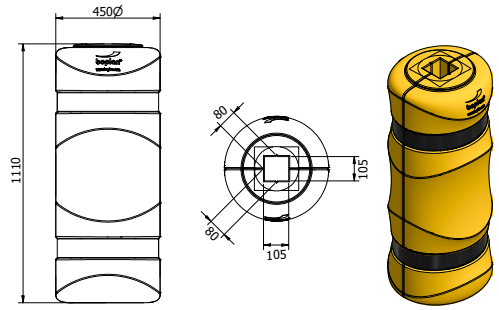	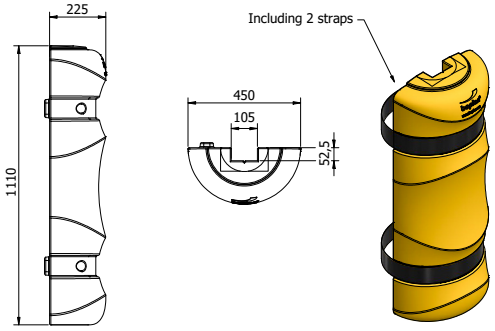

KP150 - H1100 mm

KP1500-1100-S200YE	KP1500-1100-S100YE
2 halves (2 straps 1800mm included)	1 halve (2 straps 1800mm included)
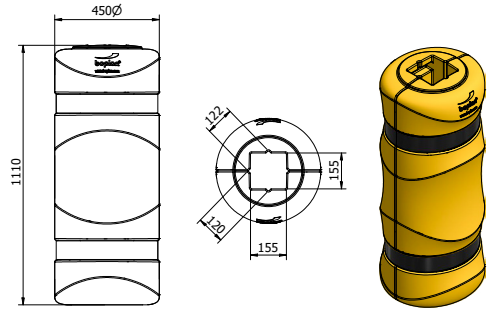	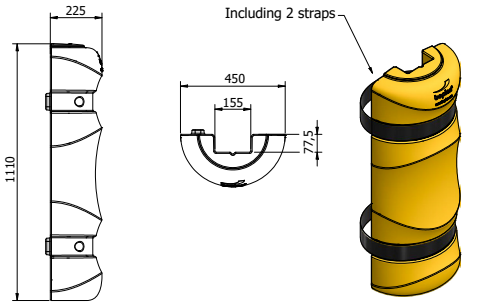

KP200 - H1100 mm

KP2000-1100-S200YE	KP2000-1100-S100YE
2 halves (3 straps 2400mm included)	1 halve (3 straps 2400mm included)
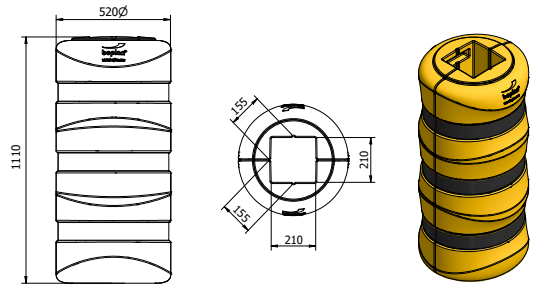	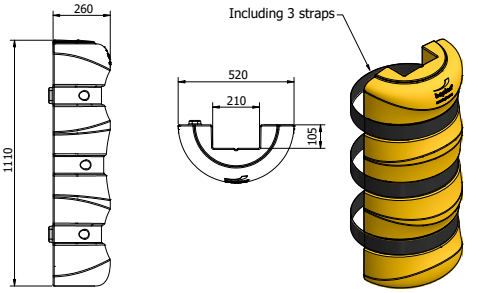

KP200 - H500 mm

KP2000-0500-S200YE KP2000-0500-S200RE	KP2000-0500-S100YE KP2000-0500-S100RE
2 halves (1 strap 2400mm included)	1 halve (1 strap 2400mm included)
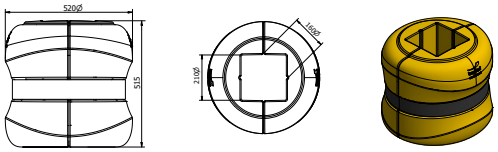	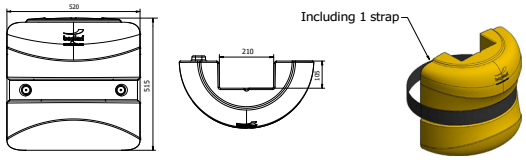

KP300 - H1100 mm

KP3000-1100-S200YE	KP3000-1100-S100YE
2 halves (3 straps 2400mm included)	1 halve (3 straps 2400mm included)
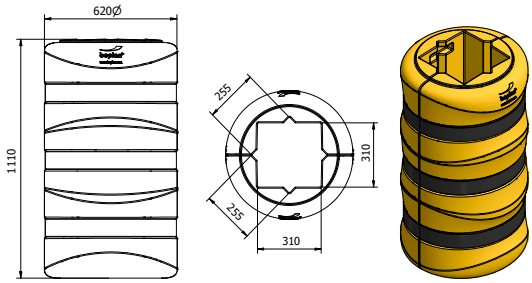	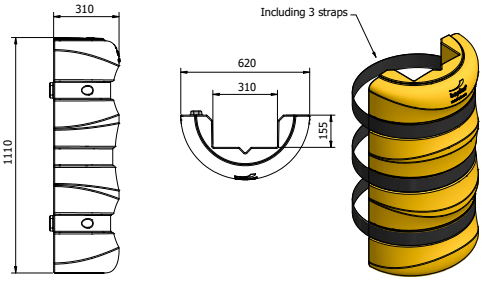

KP300 - H500 mm

KP3000-0500-S200YE KP3000-0500-S200RE	KP3000-0500-S100YE KP3000-0500-S100RE
2 halves (1 strap 3400mm included)	1 halve (1 strap 3400mm included)
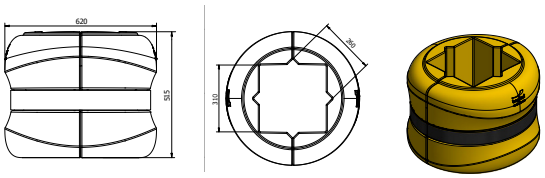	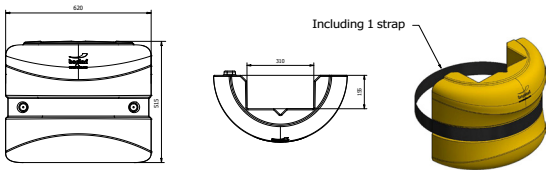

KP400 - H1100 mm

KP4000-1100-S200YE	KP4000-1100-S100YE
2 halves (3 straps 3400mm included)	1 halve (3 straps 3400mm included)
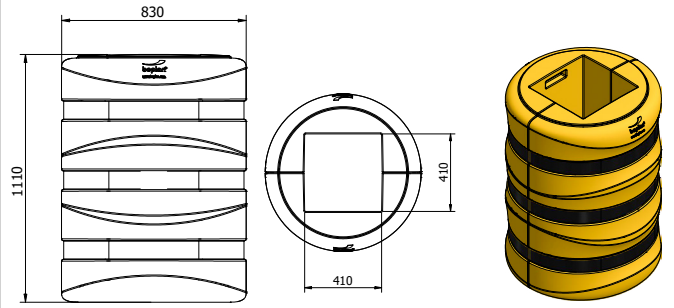	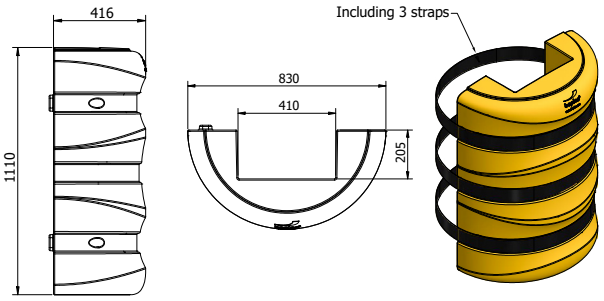

KP500 - H1100 mm

KP5000-1100-S200YE	KP5000-1100-S100YE
2 halves (3 straps 3400mm included)	1 halve (3 straps 3400mm included)
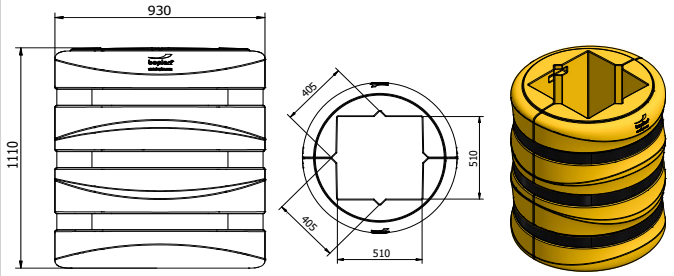	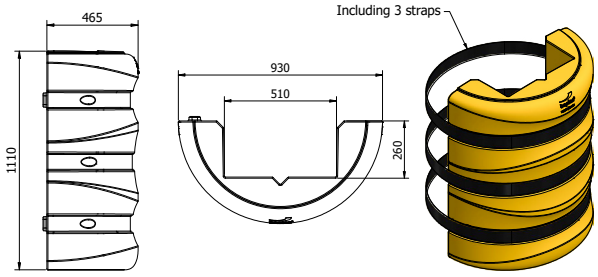

KP600 - H1100 mm

KP6000-1100-S200YE	KP6000-1100-S100YE
2 halves (3 straps 4000mm included)	1 halve (3 straps 4000mm included)
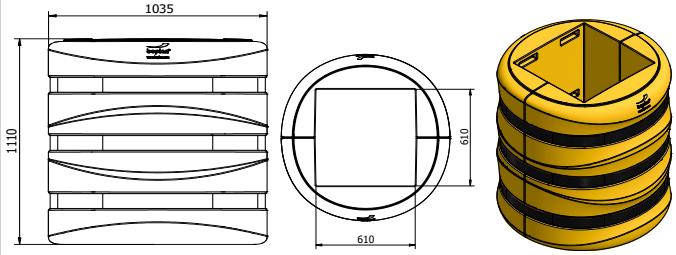	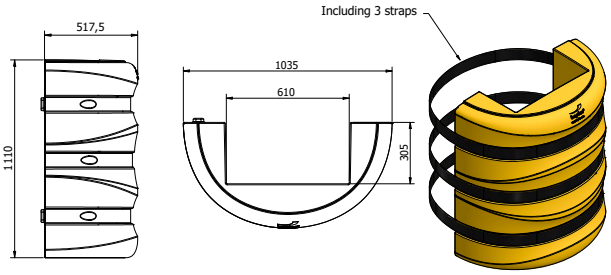

ACCESSORIES

KP0099-1100-300YE KP0099-1100-600YE KP0099-0500-300YE KP0099-0500-300RE	KP0099-8180-S200ZC KP0099-8180-S400ZC KP0099-8180-S600ZC	KP0099-1000-1025BL KP0099-1000-1050BL
Extension for KP200/300 - H500 mm - 100 mm - YE or RE - 1 PIECE Extension for KP100/150/200/300 - H1100 mm - 100 mm - YE - 1 PIECE Extension for KP400/500/600 - H1100 mm - 100 mm - YE - 1 PIECE	Fixation set (2) for KP H500 - 200/300 Fixation set (4) for KP H1100 - 100/150/200/300/400 Fixation set (6) for KP H1100 - 500/600	KP Fill up foam - 25mm thick KP Fill up foam - 50mm thick

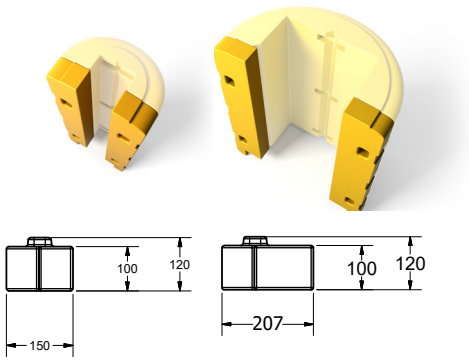

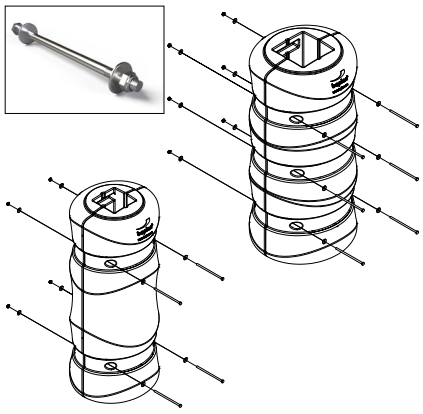

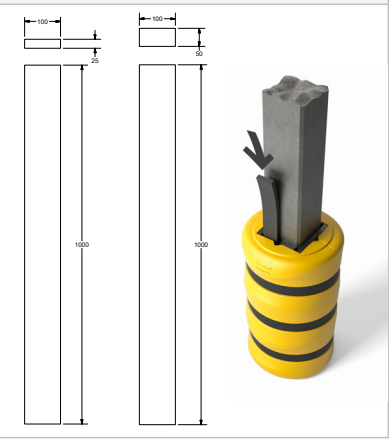

COLUMN STRAP SETS
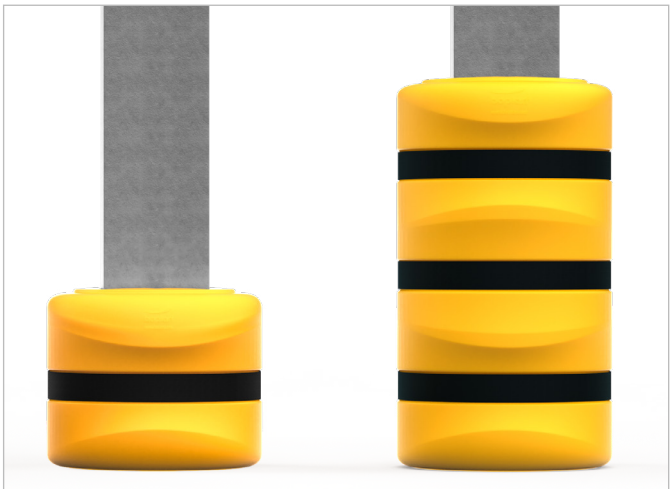
KP0099-1800-S200BL	Column strap set (2) - 100/150 - L1800mm - BL
KP0099-2400-S100BL	Column strap set (1) - 200/300 - L2400mm - BL
KP0099-2400-S300BL	Column strap set (3) - 200/300 - L2400mm - BL
KP0099-3400-S300BL	Column strap set (3) - 400/500 - L3400mm - BL
KP0099-4000-S300BL	Column strap set (3) - 600 - L4000mm - BL